www.igexams.com

Centre No.						Paper Reference							Surname	Initial(s)
Candidate No.						6	6	7	8	/	0	1	Signature	

Paper Reference(s)

6678/01

Edexcel GCE

Mechanics M2

Advanced/Advanced Subsidiary

Thursday 25 January 2007 – Morning

Time: 1 hour 30 minutes

Examiner's use only

Team Leader's use only

Question Number	Leave Blank
1	
2	
3	
4	
5	
6	
7	
Total	

Materials required for examination
Mathematical Formulae (Green)

Items included with question papers
Nil

Candidates may use any calculator EXCEPT those with the facility for symbolic algebra, differentiation and/or integration. Thus candidates may NOT use calculators such as the Texas Instruments TI 89, TI 92, Casio CFX 9970G, Hewlett Packard HP 48G.

Instructions to Candidates

In the boxes above, write your centre number, candidate number, your surname, initial(s) and signature.
Check that you have the correct question paper.
You must write your answer to each question in the space following the question.
Whenever a numerical value of g is required, take $g = 9.8$ m s^{-2}.
When a calculator is used, the answer should be given to an appropriate degree of accuracy.

Information for Candidates

A booklet 'Mathematical Formulae and Statistical Tables' is provided.
Full marks may be obtained for answers to ALL questions.
The marks for individual questions and the parts of questions are shown in round brackets: e.g. **(2)**.
There are 7 questions in this question paper. The total mark for this paper is 75.
There are 16 pages in this question paper. Any blank pages are indicated.

Advice to Candidates

You must ensure that your answers to parts of questions are clearly labelled.
You must show sufficient working to make your methods clear to the Examiner. Answers without working may gain no credit.

This publication may be reproduced only in accordance with Edexcel Limited copyright policy.
©2007 Edexcel Limited.

Printer's Log. No.
N23559A
W850/R6678/57570 3/3/3/3/3/3/3/5800

N 2 3 5 5 9 A 0 1 1 6

Turn over

edexcel
advancing learning, changing lives

www.igexams.com

Leave blank

1. A particle of mass 0.8 kg is moving in a straight line on a rough horizontal plane. The speed of the particle is reduced from $15\,\text{m s}^{-1}$ to $10\,\text{m s}^{-1}$ as the particle moves 20 m. Assuming that the only resistance to motion is the friction between the particle and the plane, find

(a) the work done by friction in reducing the speed of the particle from $15\,\text{m s}^{-1}$ to $10\,\text{m s}^{-1}$,

(2)

(b) the coefficient of friction between the particle and the plane.

(4)

www.igexams.com

Leave blank

2. A car of mass 800 kg is moving at a constant speed of $15\ \text{m s}^{-1}$ down a straight road inclined at an angle α to the horizontal, where $\sin \alpha = \frac{1}{24}$. The resistance to motion from non-gravitational forces is modelled as a constant force of magnitude 900 N.

(a) Find, in kW, the rate of working of the engine of the car.

(4)

When the car is travelling down the road at $15\ \text{m s}^{-1}$, the engine is switched off. The car comes to rest in time T seconds after the engine is switched off. The resistance to motion from non-gravitational forces is again modelled as a constant force of magnitude 900 N.

(b) Find the value of T.

(4)

Leave blank

3.

Figure 1

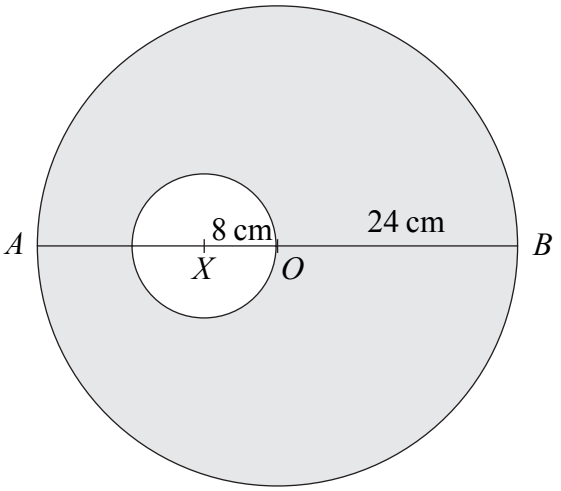

Figure 1 shows a template T made by removing a circular disc, of centre X and radius 8 cm, from a uniform circular lamina, of centre O and radius 24 cm. The point X lies on the diameter AOB of the lamina and $AX = 16$ cm. The centre of mass of T is at the point G.

(a) Find AG.

(6)

The template T is free to rotate about a smooth fixed horizontal axis, perpendicular to the plane of T, which passes through the mid-point of OB. A small stud of mass $\frac{1}{4}m$ is fixed at B, and T and the stud are in equilibrium with AB horizontal. Modelling the stud as a particle,

(b) find the mass of T in terms of m.

(4)

www.igexams.com

Leave blank

Question 3 continued

(Total 10 marks)

Q3

www.igexams.com

Leave blank

4. A particle P of mass m is moving in a straight line on a smooth horizontal table. Another particle Q of mass km is at rest on the table. The particle P collides directly with Q. The direction of motion of P is reversed by the collision. After the collision, the speed of P is v and the speed of Q is $3v$. The coefficient of restitution between P and Q is $\frac{1}{2}$.

(a) Find, in terms of v only, the speed of P before the collision.

(3)

(b) Find the value of k.

(3)

After being struck by P, the particle Q collides directly with a particle R of mass $11m$ which is at rest on the table. After this second collision, Q and R have the same speed and are moving in opposite directions. Show that

(c) the coefficient of restitution between Q and R is $\frac{3}{4}$,

(4)

(d) there will be a further collision between P and Q.

(2)

Leave blank

5. **Figure 2**

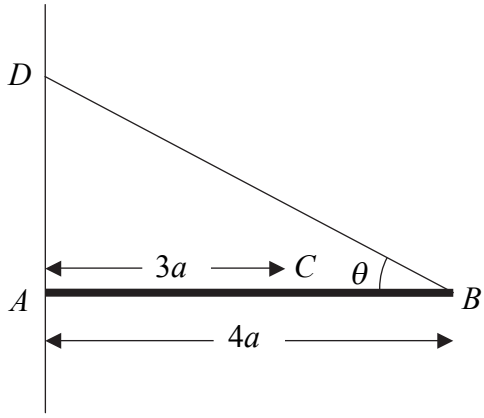

A horizontal uniform rod AB has mass m and length $4a$. The end A rests against a rough vertical wall. A particle of mass $2m$ is attached to the rod at the point C, where $AC = 3a$. One end of a light inextensible string BD is attached to the rod at B and the other end is attached to the wall at a point D, where D is vertically above A. The rod is in equilibrium in a vertical plane perpendicular to the wall. The string is inclined at an angle θ to the horizontal, where $\tan\theta = \frac{3}{4}$, as shown in Figure 2.

(a) Find the tension in the string.

(5)

(b) Show that the horizontal component of the force exerted by the wall on the rod has magnitude $\frac{8}{3}mg$.

(3)

The coefficient of friction between the wall and the rod is μ. Given that the rod is in limiting equilibrium,

(c) find the value of μ.

(4)

www.igexams.com

Leave blank

Question 5 continued

(Total 12 marks)

Q5

www.igexams.com

Leave blank

6. A particle P of mass 0.5 kg is moving under the action of a single force $\mathbf{F}$ newtons. At time t seconds, $\mathbf{F} = (1.5t^2 - 3)\mathbf{i} + 2t\mathbf{j}$. When $t = 2$, the velocity of P is $(-4\mathbf{i} + 5\mathbf{j})$ m s^{-1}.

(a) Find the acceleration of P at time t seconds.

(2)

(b) Show that, when $t = 3$, the velocity of P is $(9\mathbf{i} + 15\mathbf{j})$ m s^{-1}.

(5)

When $t = 3$, the particle P receives an impulse $\mathbf{Q}$ N s. Immediately after the impulse the velocity of P is $(-3\mathbf{i} + 20\mathbf{j})$ m s^{-1}. Find

(c) the magnitude of $\mathbf{Q}$,

(3)

(d) the angle between $\mathbf{Q}$ and $\mathbf{i}$.

(3)

www.igexams.com

Leave blank

7. **Figure 3**

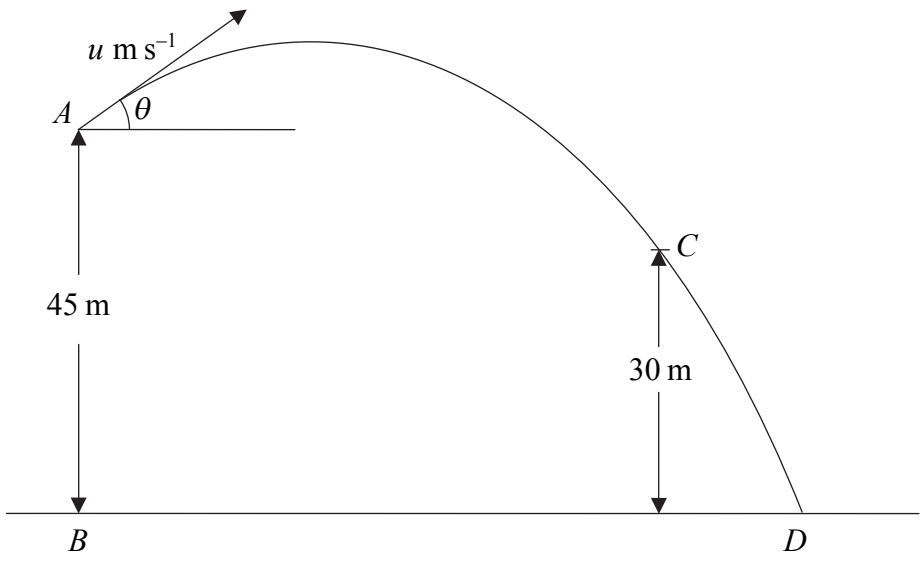

A particle P is projected from a point A with speed u m s^{-1} at an angle of elevation θ, where $\cos\theta = \frac{4}{5}$. The point B, on horizontal ground, is vertically below A and $AB = 45$ m. After projection, P moves freely under gravity passing through a point C, 30 m above the ground, before striking the ground at the point D, as shown in Figure 3.

Given that P passes through C with speed 24.5 m s^{-1},

(a) using conservation of energy, or otherwise, show that $u = 17.5$,

(4)

(b) find the size of the angle which the velocity of P makes with the horizontal as P passes through C,

(3)

(c) find the distance BD.

(7)

www.igexams.com

Leave blank

Question 7 continued

www.igexams.com

Leave blank

Question 7 continued

Q7

(Total 14 marks)

TOTAL FOR PAPER: 75 MARKS

END